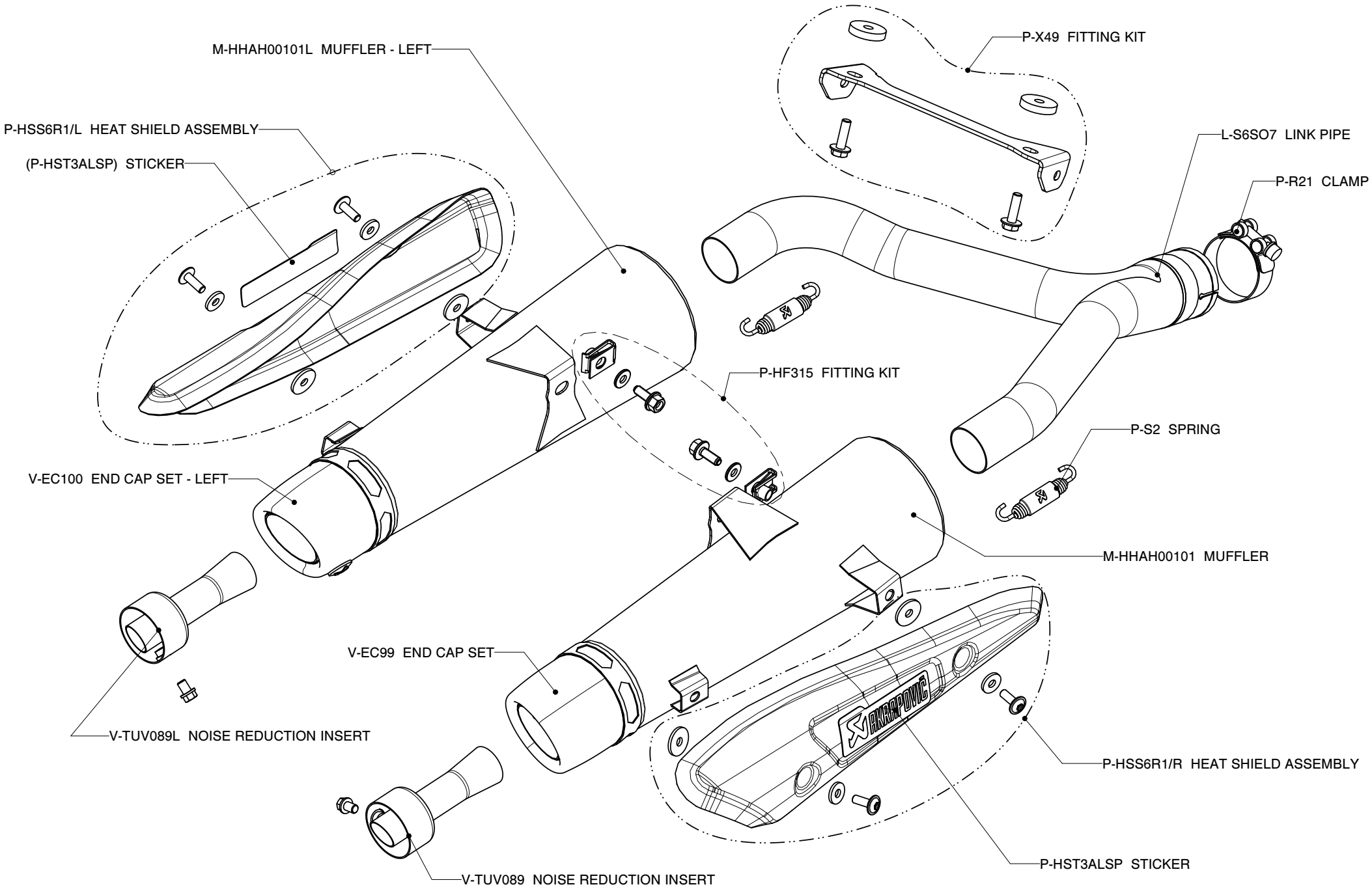SUZUKI GSR 600, SLIP-ON exhaust system / Street legal
Product code: SS-S6SO7-HHAH